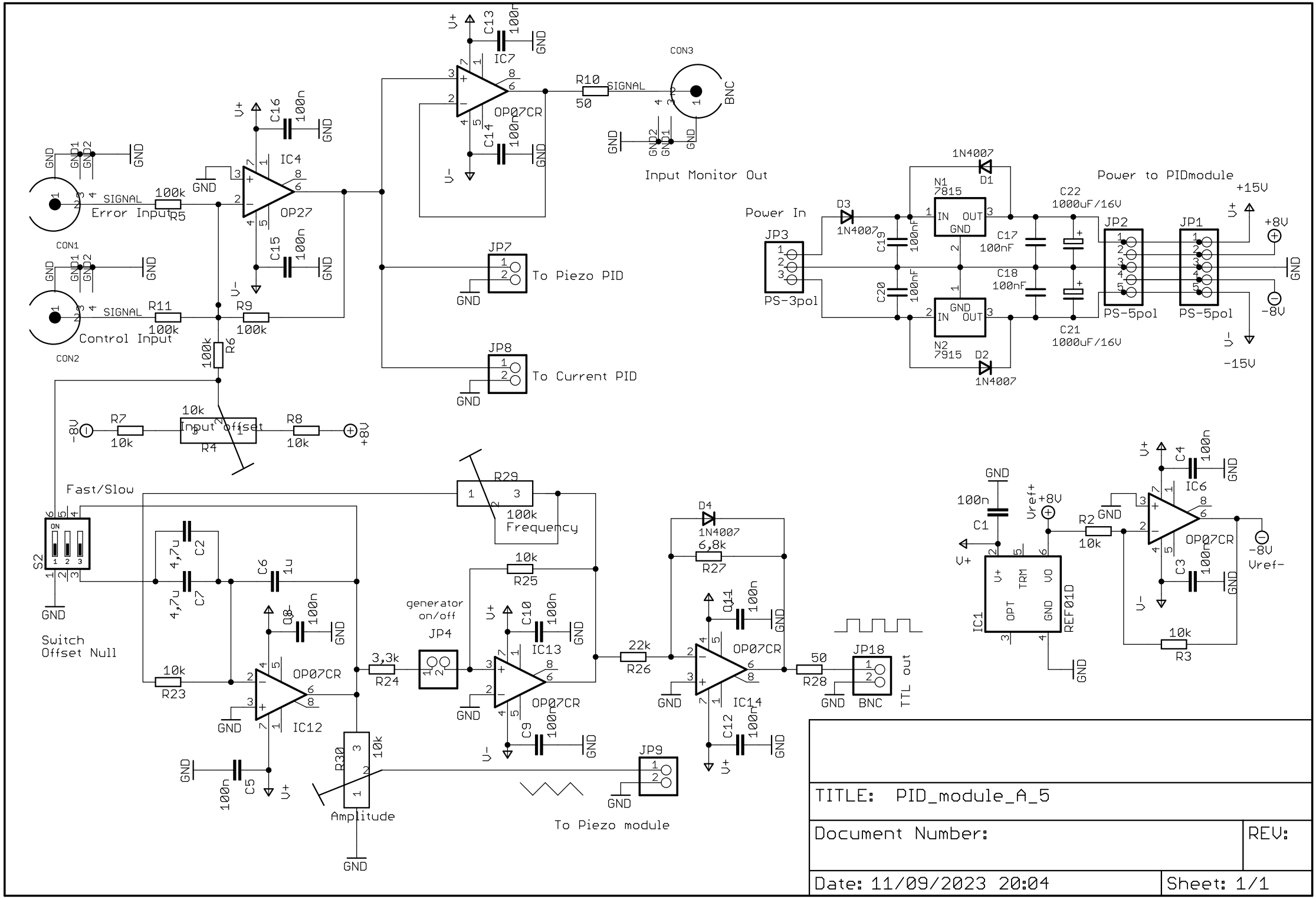

TITLE: PID_module_A_5

Document Number:

REV:

Date: 11/09/2023 20:04

Sheet: 1/1