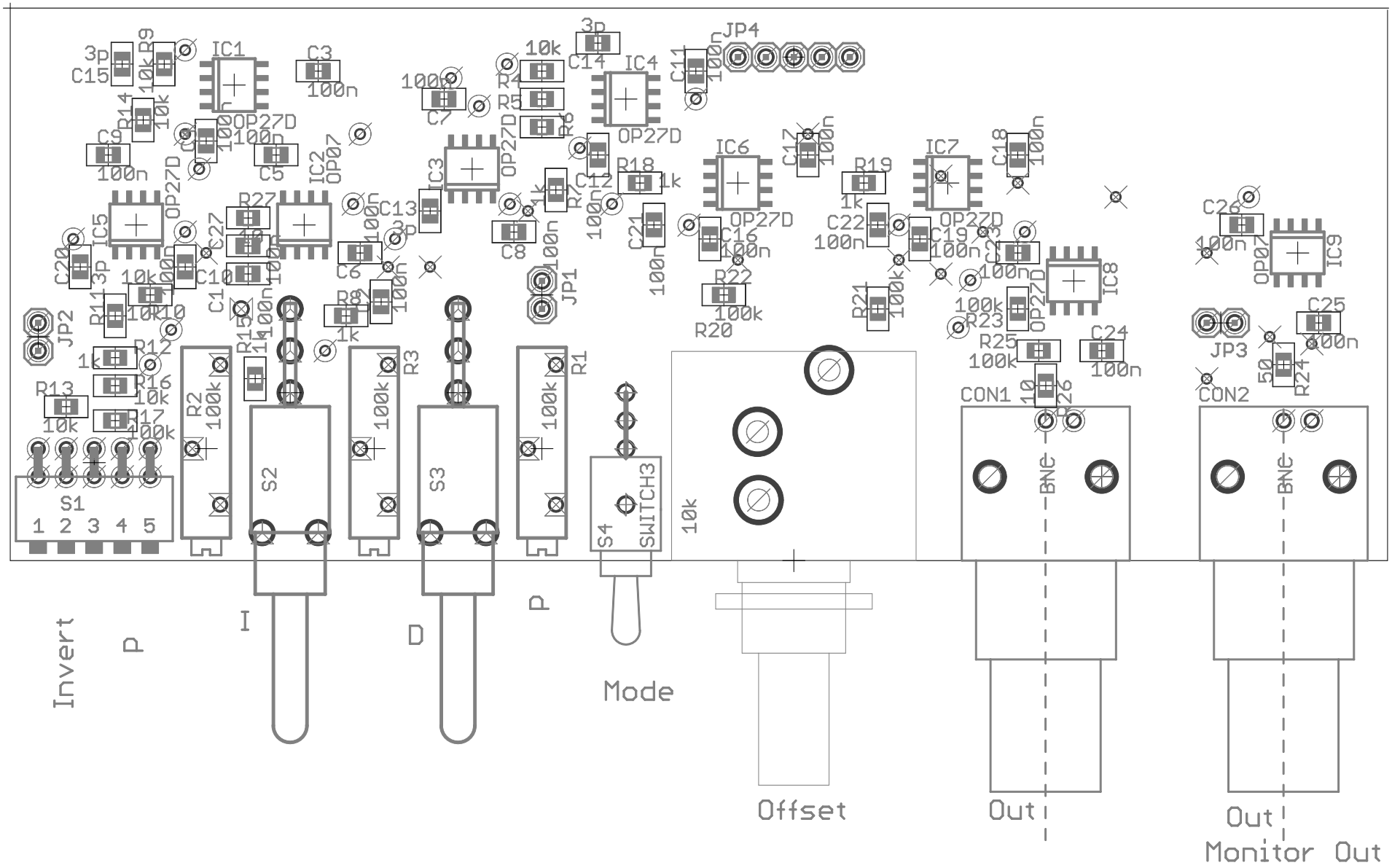

6/24/2008 15:14:06 f=2.00 /home/kmk/Projekte/Thijs-PID/PID_module_B_3.brd