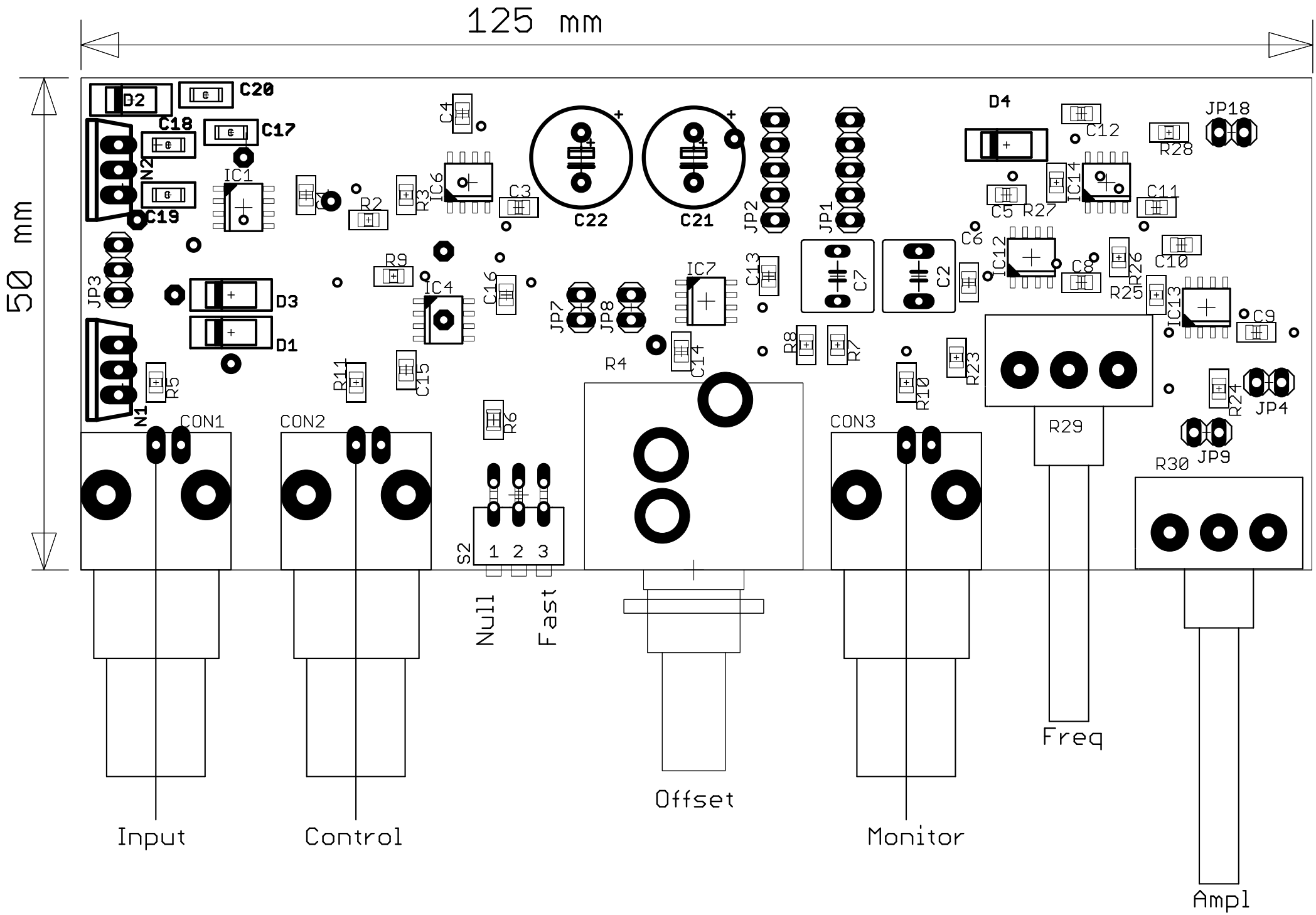
125 mm
50 mm
D2
C20
C18
C17
N2
C19
IC1
C1
R2
R3
IC6
C4
C3
C22
C21
JP2
JP1
D4
C12
JP18
R28
IC14
C5
R27
C11
C6
IC12
C8
R26
C10
R25
IC13
C9
JP3
D3
D1
R9
IC4
C16
JP7
JP8
IC7
C13
C7
C2
R8
R7
R23
R10
R4
C14
R5
R11
C15
N1
CON1
CON2
R6
CON3
R29
R24
JP4
JP9
R30
S2
1 2 3
Null
Fast
Input
Control
Offset
Monitor
Freq
Ampl