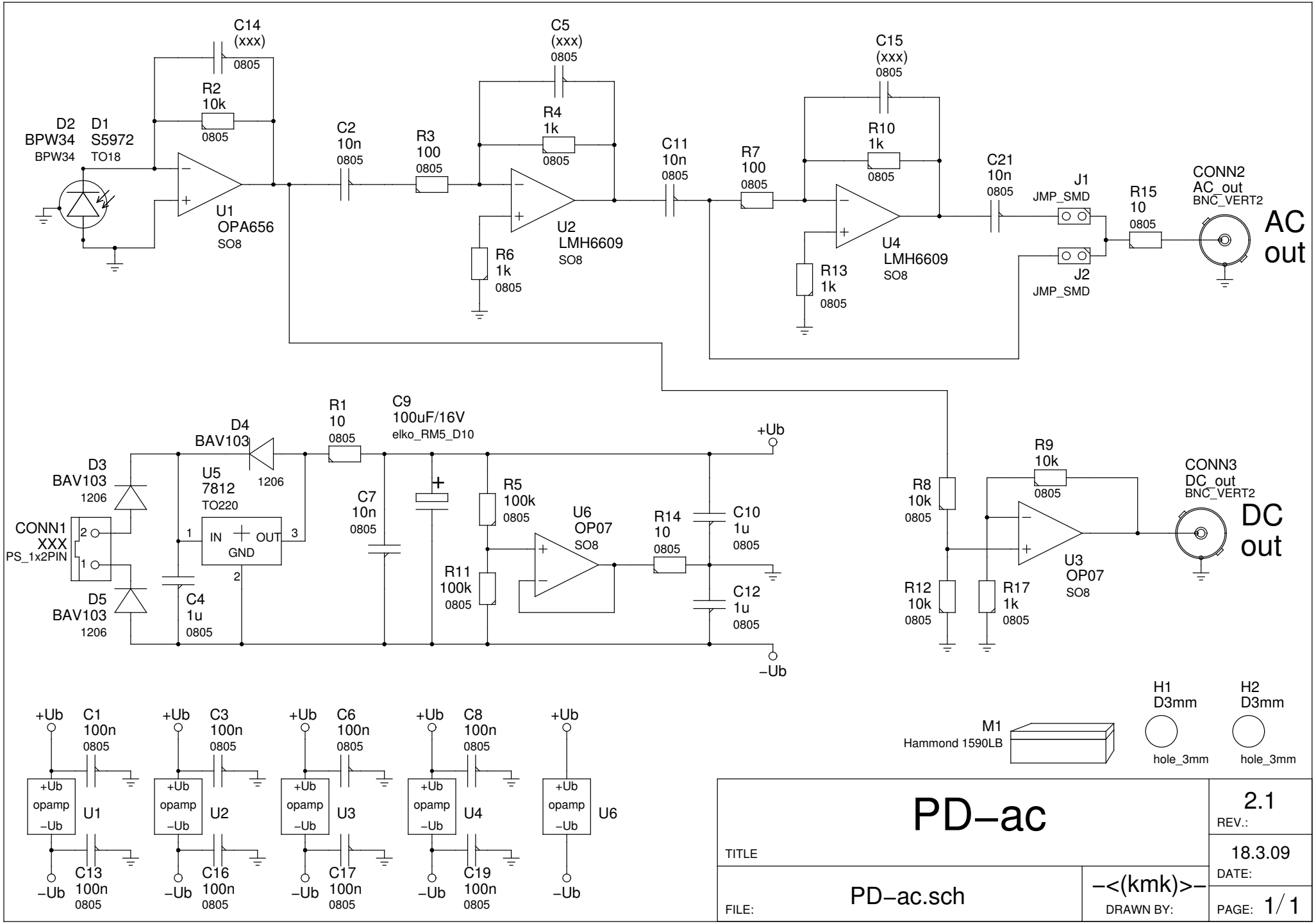
C14
(xxx)
0805
R2
10k
0805
D2
BPW34
BPW34
D1
S5972
TO18
U1
OPA656
SO8
C2
10n
0805
R3
100
0805
C5
(xxx)
0805
R4
1k
0805
R6
1k
0805
U2
LMH6609
SO8
C11
10n
0805
R7
100
0805
C15
(xxx)
0805
R10
1k
0805
R13
1k
0805
U4
LMH6609
SO8
C21
10n
0805
J1
JMP_SMD
J2
JMP_SMD
R15
10
0805
CONN2
AC_out
BNC_VERT2
AC
out
D4
BAV103
1206
R1
10
0805
C9
100uF/16V
elko_RM5_D10
+Ub
D3
BAV103
1206
U5
7812
TO220
IN
OUT
GND
CONN1
XXX
PS_1x2PIN
D5
BAV103
1206
C4
1u
0805
C7
10n
0805
R5
100k
0805
R11
100k
0805
U6
OP07
SO8
R14
10
0805
C10
1u
0805
C12
1u
0805
–Ub
R8
10k
0805
R12
10k
0805
R9
10k
0805
R17
1k
0805
U3
OP07
SO8
CONN3
DC_out
BNC_VERT2
DC
out
+Ub
C1
100n
0805
+Ub
opamp
–Ub
U1
C13
100n
0805
C3
100n
0805
U2
C16
100n
0805
C6
100n
0805
U3
C17
100n
0805
C8
100n
0805
U4
C19
100n
0805
U6
M1
Hammond 1590LB
H1
D3mm
hole_3mm
H2
D3mm
hole_3mm
PD–ac
TITLE
2.1
REV.:
18.3.09
DATE:
PD–ac.sch
FILE:
–<(kmk)>–
DRAWN BY:
1/1
PAGE: