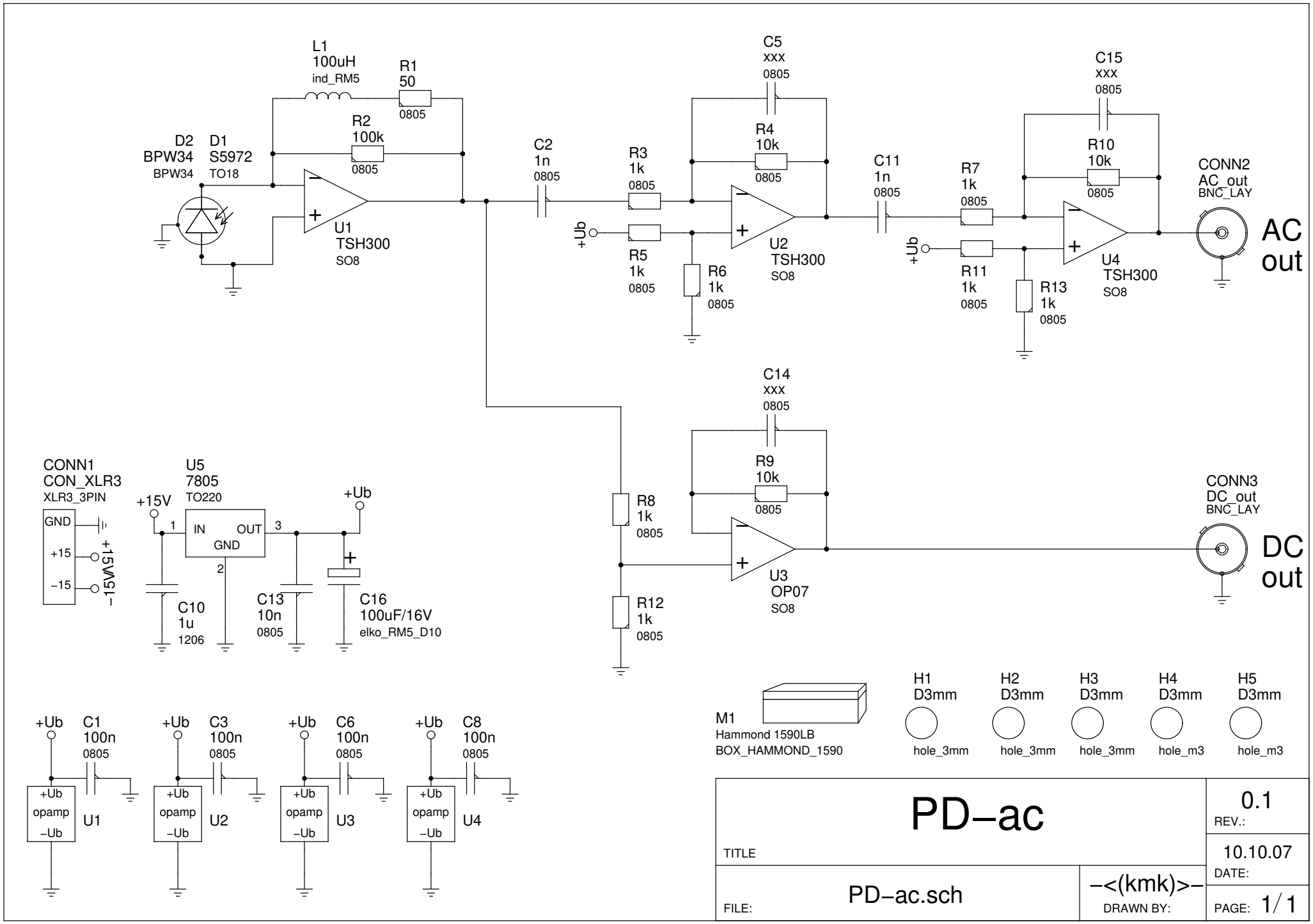
L1
100uH
ind_RM5
R1
50
0805
R2
100k
0805
D2
BPW34
BPW34
D1
S5972
TO18
U1
TSH300
SO8
C2
1n
0805
R3
1k
0805
R5
1k
0805
R6
1k
0805
+Ub
C5
xxx
0805
R4
10k
0805
U2
TSH300
SO8
C11
1n
0805
R7
1k
0805
R11
1k
0805
R13
1k
0805
C15
xxx
0805
R10
10k
0805
U4
TSH300
SO8
CONN2
AC_out
BNC_LAY
AC
out
C14
xxx
0805
R9
10k
0805
R8
1k
0805
R12
1k
0805
U3
OP07
SO8
CONN3
DC_out
BNC_LAY
DC
out
CONN1
CON_XLR3
XLR3_3PIN
GND
+15
−15
+15V
−15V
U5
7805
TO220
+15V
IN
OUT
GND
C10
1u
1206
C13
10n
0805
C16
100uF/16V
elko_RM5_D10
M1
Hammond 1590LB
BOX_HAMMOND_1590
H1
D3mm
hole_3mm
H2
D3mm
hole_3mm
H3
D3mm
hole_3mm
H4
D3mm
hole_m3
H5
D3mm
hole_m3
C1
100n
0805
U1
C3
100n
0805
U2
C6
100n
0805
U3
C8
100n
0805
U4
opamp
PD−ac
TITLE
0.1
REV.:
10.10.07
DATE:
FILE:
PD−ac.sch
−<(kmk)>−
DRAWN BY:
PAGE: 1/1