Warn, when beyond the limit

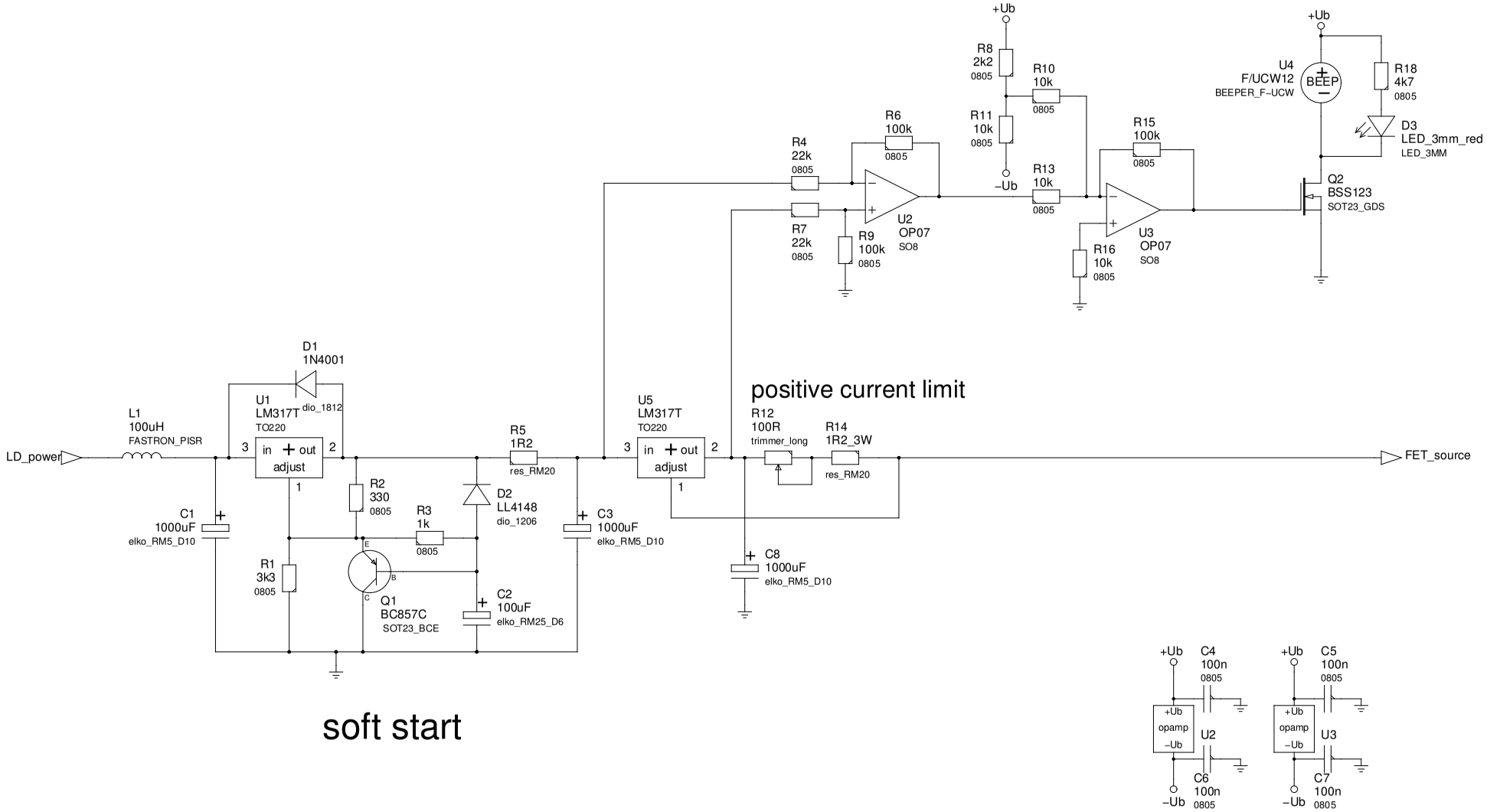

value in parenthesis ---> Do not populate

value with asterix ---> value may have to be changed

TITLE	Lasertreiber (Limit)	REV.: 2.1
		DATE: 2.11.09
FILE: lasertreiber_3_limit.sch	DRAWN BY: −<(kmk)>−	PAGE: 4/4