# Warn, when beyond the limit

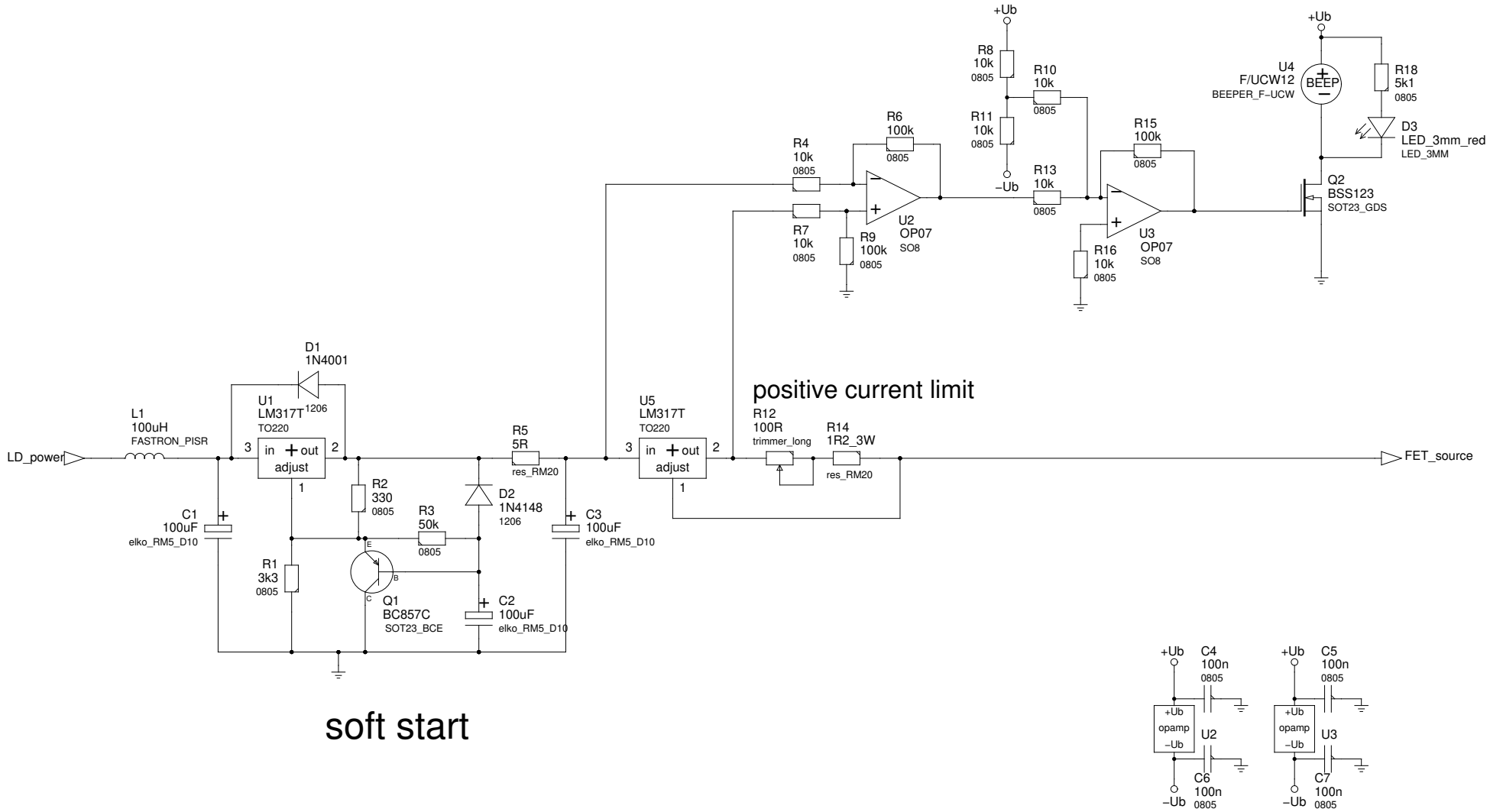


value in parenthesis −−−> Do not populate

value with asterix −−−> value may have to be changed

| | | |
|---|---|---|
| TITLE: Lasertreiber (Limit) | | REV.: 0.1 |
| | | DATE: 27.5.08 |
| FILE: lasertreiber_3_limit.sch | DRAWN BY: −<(kmk)>− | PAGE: 4/4 |