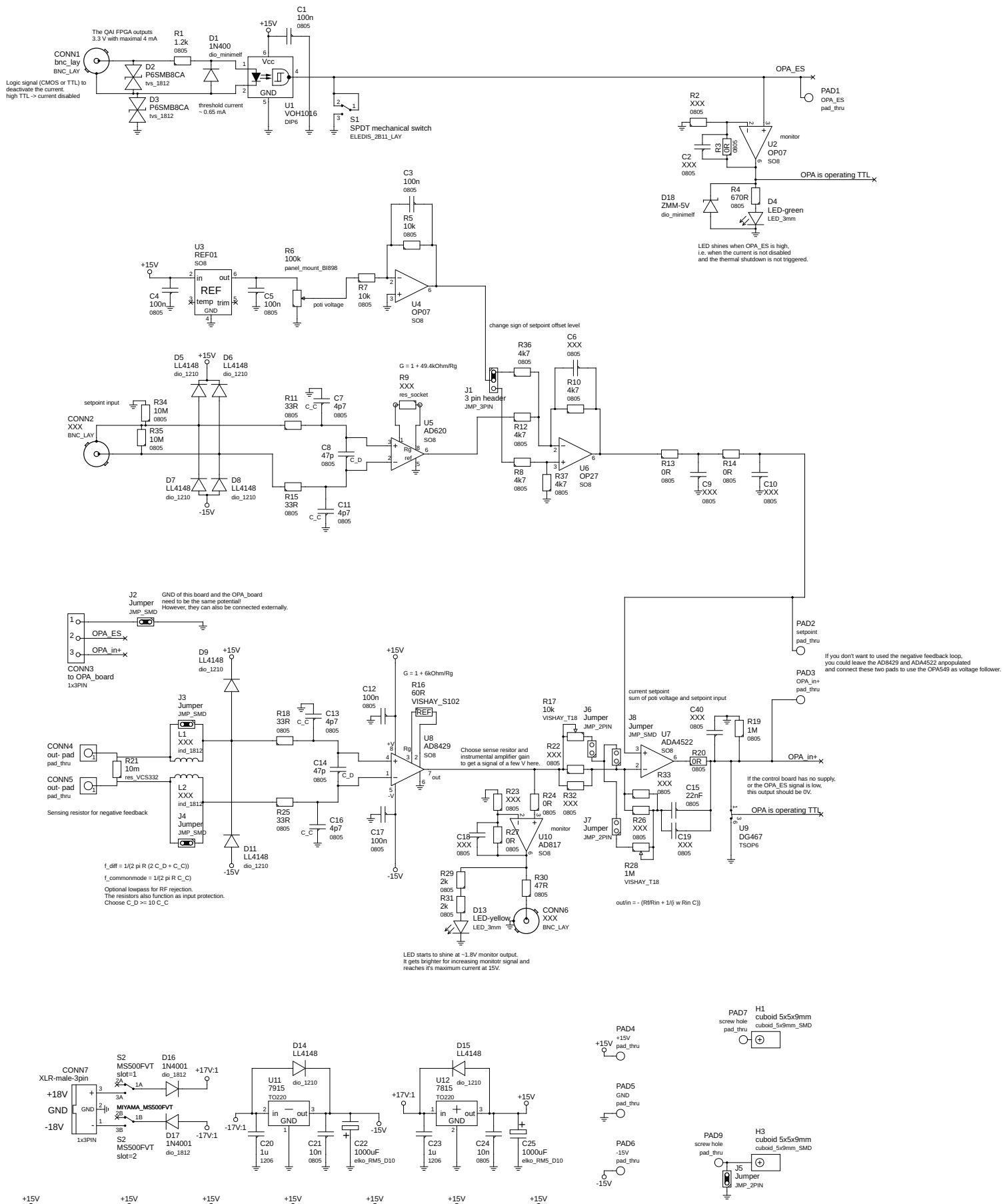
The QAI FPGA outputs 3.3 V with maximal 4 mA
CONN1 bnc_lay BNC_LAY
Logic signal (CMOS or TTL) to deactivate the current. high TTL -> current disabled
R1 1.2k 0805
D1 1N400 dio_minimelf
D2 P6SMB8CA tvs_1812
D3 P6SMB8CA tvs_1812
threshold current ~ 0.65 mA
+15V
C1 100n 0805
Vcc
GND
U1 VOH1016 DIP6
S1 SPDT mechanical switch ELEDIS_2B11_LAY
OPA_ES
PAD1 OPA_ES pad_thru
R2 XXX 0805
R3 0R 0805
C2 XXX 0805
U2 OP07 SO8
monitor
OPA is operating TTL
R4 670R 0805
D18 ZMM-5V dio_minimelf
D4 LED-green LED_3mm
LED shines when OPA_ES is high, i.e. when the current is not disabled and the thermal shutdown is not triggered.
C3 100n 0805
R5 10k 0805
U3 REF01 SO8
REF
in out temp trim GND
C4 100n 0805
C5 100n 0805
R6 100k panel_mount_BI898
poti voltage
R7 10k 0805
U4 OP07 SO8
change sign of setpoint offset level
R36 4k7 0805
C6 XXX 0805
R10 4k7 0805
D5 LL4148 dio_1210
D6 LL4148 dio_1210
G = 1 + 49.4kOhm/Rg
R9 XXX res_socket
J1 3 pin header JMP_3PIN
setpoint input
R34 10M 0805
CONN2 XXX BNC_LAY
R35 10M 0805
R11 33R 0805
C7 4p7 0805
U5 AD620 SO8
C8 47p 0805
R12 4k7 0805
R8 4k7 0805
R37 4k7 0805
U6 OP27 SO8
D7 LL4148 dio_1210
D8 LL4148 dio_1210
-15V
R15 33R 0805
C11 4p7 0805
R13 0R 0805
C9 XXX 0805
R14 0R 0805
C10 XXX 0805
J2 Jumper JMP_SMD
GND of this board and the OPA_board need to be the same potential! However, they can also be connected externally.
OPA_ES
OPA_in+
CONN3 to OPA_board 1x3PIN
PAD2 setpoint pad_thru
If you don't want to used the negative feedback loop, you could leave the AD8429 and ADA4522 anpopulated and connect these two pads to use the OPA549 as voltage follower.
PAD3 OPA_in+ pad_thru
D9 LL4148 dio_1210
G = 1 + 6kOhm/Rg
R16 60R VISHAY_S102
REF
C12 100n 0805
U8 AD8429 SO8
current setpoint sum of poti voltage and setpoint input
R17 10k VISHAY_T18
J6 Jumper JMP_2PIN
J8 Jumper JMP_SMD
U7 ADA4522 SO8
C40 XXX 0805
R19 1M 0805
J3 Jumper JMP_SMD
R18 33R 0805
C13 4p7 0805
L1 XXX ind_1812
CONN4 out- pad pad_thru
R21 10m res_VCS332
CONN5 out- pad pad_thru
Sensing resistor for negative feedback
C14 47p 0805
Choose sense resitor and instrumental amplifier gain to get a signal of a few V here.
R22 XXX 0805
R32 XXX 0805
R20 0R 0805
OPA_in+
R33 XXX 0805
C15 22nF 0805
If the control board has no supply, or the OPA_ES signal is low, this output should be 0V.
OPA is operating TTL
L2 XXX ind_1812
J4 Jumper JMP_SMD
R25 33R 0805
C16 4p7 0805
C17 100n 0805
R23 XXX 0805
R24 0R 0805
C18 XXX 0805
R27 0R 0805
U10 AD817 SO8
monitor
J7 Jumper JMP_2PIN
R26 XXX 0805
C19 XXX 0805
U9 DG467 TSOP6
D11 LL4148 dio_1210
f_diff = 1/(2 pi R (2 C_D + C_C))
f_commonmode = 1/(2 pi R C_C)
Optional lowpass for RF rejection. The resistors also function as input protection. Choose C_D >= 10 C_C
R29 2k 0805
R31 2k 0805
R30 47R 0805
R28 1M VISHAY_T18
out/in = - (Rf/Rin + 1/(i w Rin C))
D13 LED-yellow LED_3mm
CONN6 XXX BNC_LAY
LED starts to shine at ~1.8V monitor output. It gets brighter for increasing monitotr signal and reaches it's maximum current at 15V.
PAD7 screw hole pad_thru
H1 cuboid 5x5x9mm cuboid_5x9mm_SMD
PAD4 +15V pad_thru
PAD5 GND pad_thru
PAD6 -15V pad_thru
CONN7 XLR-male-3pin
+18V
GND
-18V
1x3PIN
S2 MS500FVT slot=1
D16 1N4001 dio_1812
+17V:1
MIYAMA_MS500FVT
S2 MS500FVT slot=2
D17 1N4001 dio_1812
-17V:1
D14 LL4148 dio_1210
U11 7915 TO220
C20 1u 1206
C21 10n 0805
C22 1000uF elko_RM5_D10
D15 LL4148 dio_1210
U12 7815 TO220
C23 1u 1206
C24 10n 0805
C25 1000uF elko_RM5_D10
PAD9 screw hole pad_thru
H3 cuboid 5x5x9mm cuboid_5x9mm_SMD
J5 Jumper JMP_2PIN
U9 analog switch
U2 U4 U5 U6 U7 U10 opamp
C26 C27 C28 C29 C30 C31 C32 100n 0805
C33 C34 C35 C36 C37 C38 C39 100n 0805
TITLE: control board
REV.: 1
PROJECT: bipolar current driver
DATE: 29.05.21
FILE: control_board.sch
DRAWN BY: Martin Q.
PAGE: 1/2